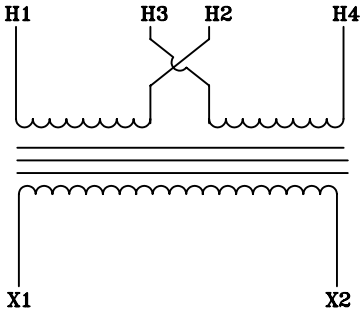

TYPICAL WIRING DIAGRAM

NOTES:

1. ALL UNITS ARE DESIGNED IN ACCORDANCE WITH INDUSTRY STANDARDS.
2. TRANSFORMERS ARE DRY-TYPE, CLASS AA, VENTILATED, OPEN-STYLE ASSEMBLY FOR INDOOR/CONTROL PANEL USE.
3. TRANSFORMER ARE BASE MOUNTED.
4. TRANSFORMERS ARE CONSTRUCTED BASED UPON A 40°C AMBIENT ENVIRONMENT.
5. MAINTAIN 1" CLEARANCE FROM ALL LIVE PARTS.

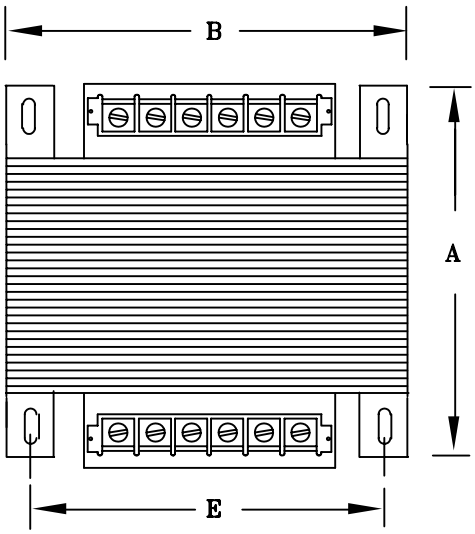

FRONT VIEW

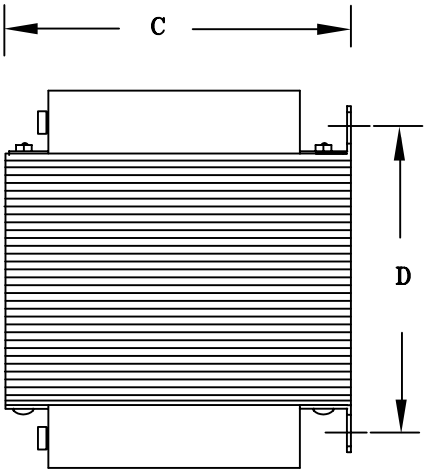

SIDE VIEW

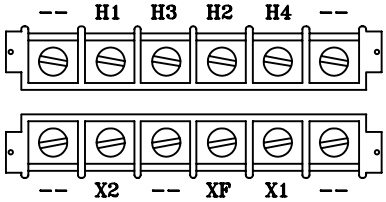

TERMINAL VIEW

APPROXIMATE DIMENSIONS (INCHES)

VA	A	B	C	D	E	PRIMARY FUSE BLOCK *	PRIMARY FUSE BLOCK COVER	PRIMARY/SECONDARY TERMINAL COVER	STEEL	lbs.
1000	6.11	6.75	5.63	3.91	6.13	TPTC-1006-1	TPTC-1006-2	TPTC-1012-A	EI-180	31

* IF YOU PURCHASE THE PRIMARY FUSE BLOCK, IT WILL ADD 1.50" TO THE "C" DIMENSION

** IF YOU UTILIZE THE SECONDARY FUSE CLIPS, THEY WILL ADD 0.50" TO THE "C" DIMENSION

DRAWINGS
- [x] APPROVAL
- [ ] RECORD
- [ ] OTHER

PRIMARY VOLTAGE	230 x 460	CUST.	XXXXXXXX		
SECONDARY VOLTAGE	115	JOB			
TEMPERATURE RISE IN °C	80	CATALOG			
WINDINGS & TERMINALS	[ ] ALUMINUM [x] COPPER	NOTE	XXXXXXXX		
FREQUENCY HERTZ	50/60	BY	ENG. LOG.	TITLE	1-PHASE, 600 VOLT CLASS CONTROL DRY TYPE TRANSFORMER
PRIMARY TAPS	NONE	DATE			
POWERTRAN		REV	MFG. LOG.	DWG. NO.	B1K0BTZ13JKF
		DATE:	DWG. FILE		