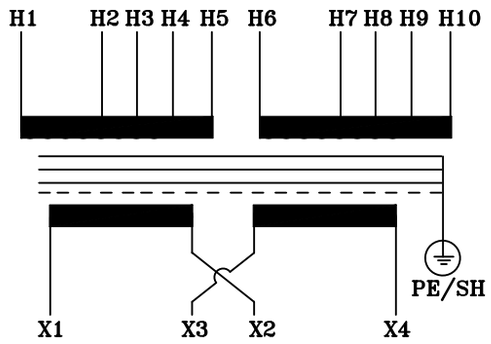

TYPICAL WIRING DIAGRAM

NOTES:

1. ALL UNITS ARE cUL LISTED & DESIGNED ACCORDANCE WITH INDUSTRY STANDARDS.
2. TRANSFORMERS ARE DRY–TYPE, CLASS AA, ENCAPSULATED IP–52 ENCLOSED FOR INDOOR / DUSTPROOF USE.
3. TRANSFORMERS ARE WALL / MACHINE MOUNTABLE VIA THE ATTACHED BRACKETS.
4. TRANSFORMERS ARE CONSTRUCTED BASED UPON A 40°C AMBIENT ENVIRONMENT.
5. MAINTAIN 1" CLEARANCE FROM ALL LIVE PARTS.
6. PAINT COLOR IS RAL# 7042.

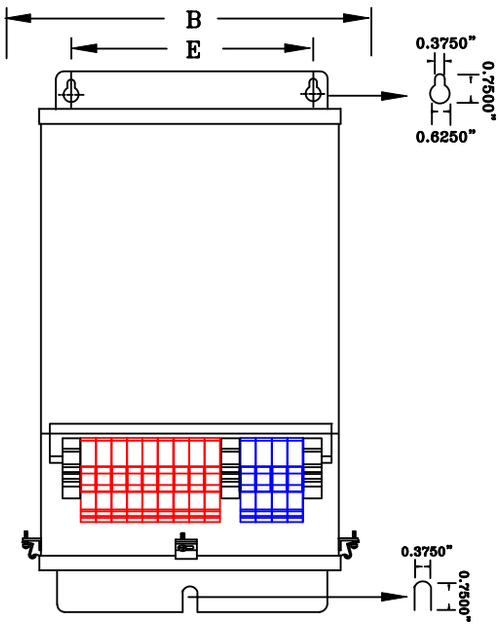

FRONT VIEW

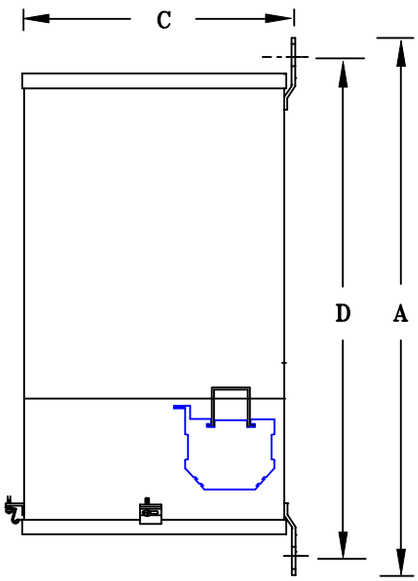

SIDE VIEW

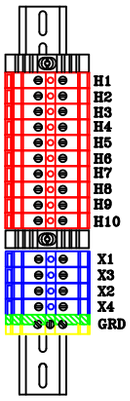

TERMINAL VIEW

APPROXIMATE DIMENSIONS (INCHES)

KVA	A	B	C	D	E	F	HARDWARE	MTG SLOTS	ENCLOSURE	lbs.	WEATHER SHIELD	TERMINAL TYPE
1.0*	12.25	8.63	6.25	11.00	5.75	----	1/4–20	0.375" x 0.625"	N212–EX	45	N/A	TBs

* ELECTROSTATIC SHIELD GROUNDED TO TRANSFORMER CASE AT FACTORY (IF APPLICABLE)

DRAWINGS
- [X] APPROVAL
- [ ] RECORD
- [ ] OTHER

PRIMARY VOLTAGE	190–200–208–220 x 380–400–416–440	CUST.	XXXXXXXX		
SECONDARY VOLTAGE	110 x 220	JOB			
TEMPERATURE RISE IN °C	115	CATALOG			
WINDINGS & TERMINALS	[ ] ALUMINUM [X] COPPER	NOTE	ELECTROSTATICALLY SHIELDED, CE MARKED		
FREQUENCY IN HERTZ	50/60	BY	ENG. LOG.	TITLE	1–PHASE, 600 VOLT CLASS ISOLATION DRY TYPE TRANSFORMER
PRIMARY TAPS	NONE	DATE			
POWERTRAN		REV	MFG. LOG.	DWG. NO.	PCE–1–1K–053–IP52
		DATE:	DWG. FILE		