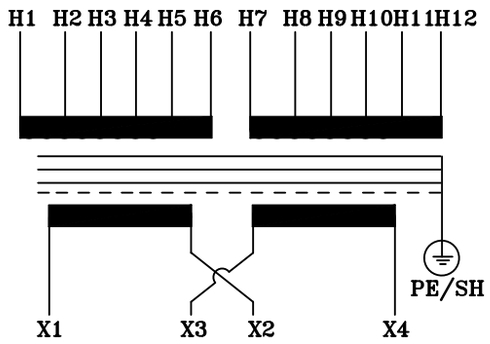

TYPICAL WIRING DIAGRAM

NOTES:

1. ALL UNITS ARE cUL LISTED & DESIGNED ACCORDANCE WITH INDUSTRY STANDARDS.
2. TRANSFORMERS ARE DRY–TYPE, CLASS AA, ENCAPSULATED IP–52 ENCLOSED FOR INDOOR / DUSTPROOF USE.
3. TRANSFORMERS ARE WALL / MACHINE MOUNTABLE VIA THE ATTACHED BRACKETS.
4. TRANSFORMERS ARE CONSTRUCTED BASED UPON A 40°C AMBIENT ENVIRONMENT.
5. MAINTAIN 1" CLEARANCE FROM ALL LIVE PARTS.
6. PAINT COLOR IS RAL# 7042.

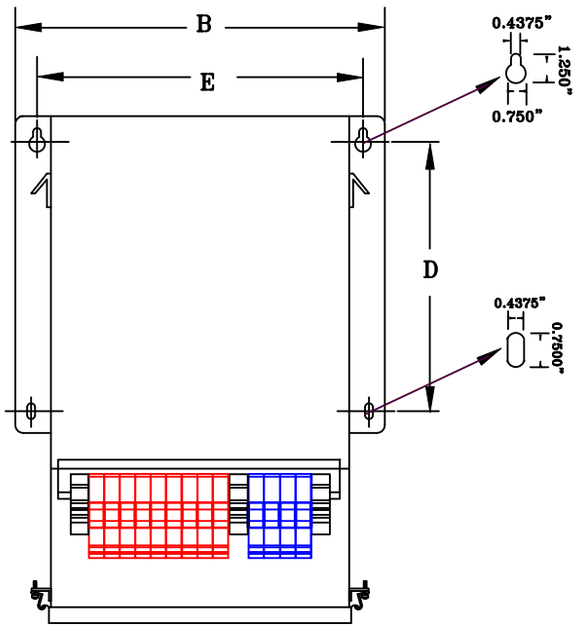

FRONT VIEW

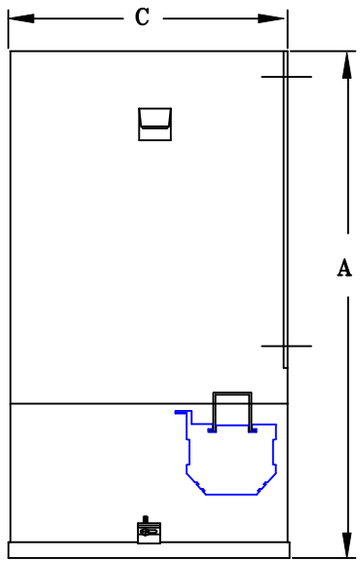

SIDE VIEW

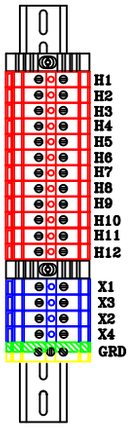

TERMINAL VIEW

APPROXIMATE DIMENSIONS (INCHES)

KVA	A	B	C	D	E	F	HARDWARE	MTG SLOTS	ENCLOSURE	lbs.	WEATHER SHIELD	TERMINAL TYPE
2.0*	15.25	12.38	9.00	8.50	11.25	----	3/8–16	0.437" x 0.750"	N10	125	N/A	TBs

* ELECTROSTATIC SHIELD GROUNDED TO TRANSFORMER CASE AT FACTORY (IF APPLICABLE)

DRAWINGS
- [X] APPROVAL
- [ ] RECORD
- [ ] OTHER

PRIMARY VOLTAGE	190–200–208–220–240 x 380–400–415–440–480	CUST.	XXXXXXXX
SECONDARY VOLTAGE	120 x 240	JOB	
TEMPERATURE RISE IN °C	115	CATALOG	
WINDINGS & TERMINALS	[ ] ALUMINUM [X] COPPER	NOTE	ELECTROSTATICALLY SHIELDED, CE MARKED
FREQUENCY IN HERTZ	50/60	BY / ENG. LOG.	TITLE: 1–PHASE, 600 VOLT CLASS ISOLATION DRY TYPE TRANSFORMER
PRIMARY TAPS	NONE	DATE	
POWERTRAN		REV / MFG. LOG.	DWG. NO.
		DATE: / DWG. FILE	PCE–1–2K–050–IP52