FILE: J:\CUSTDWG\CATRL\CD-00202

INDUCTANCE	LOSSES	WEIGHT
20 mH	11.3 Watts	4 Lbs

NO.	CHANGE DESCRIPTION	BY	DATE	C'K'D

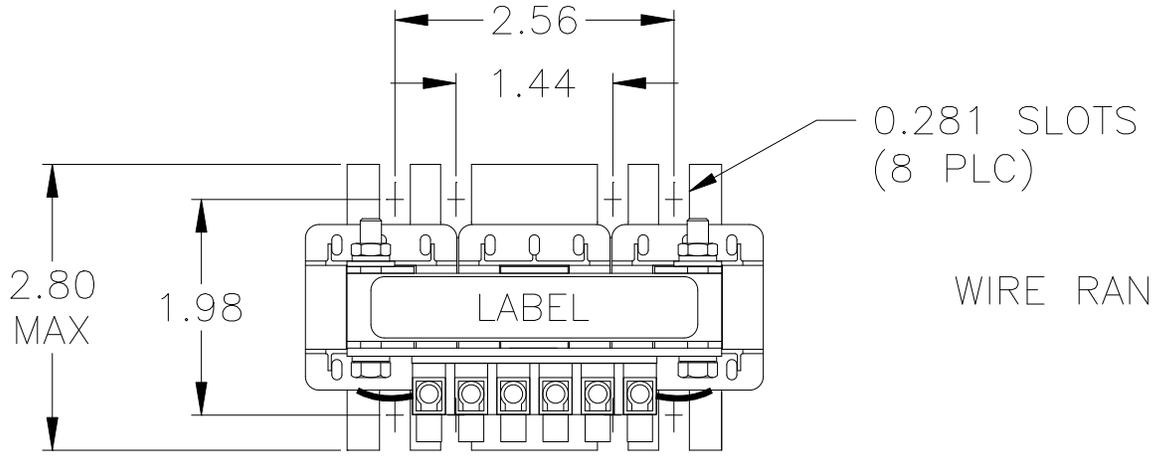

WIRE RANGE: 22–14 AWG

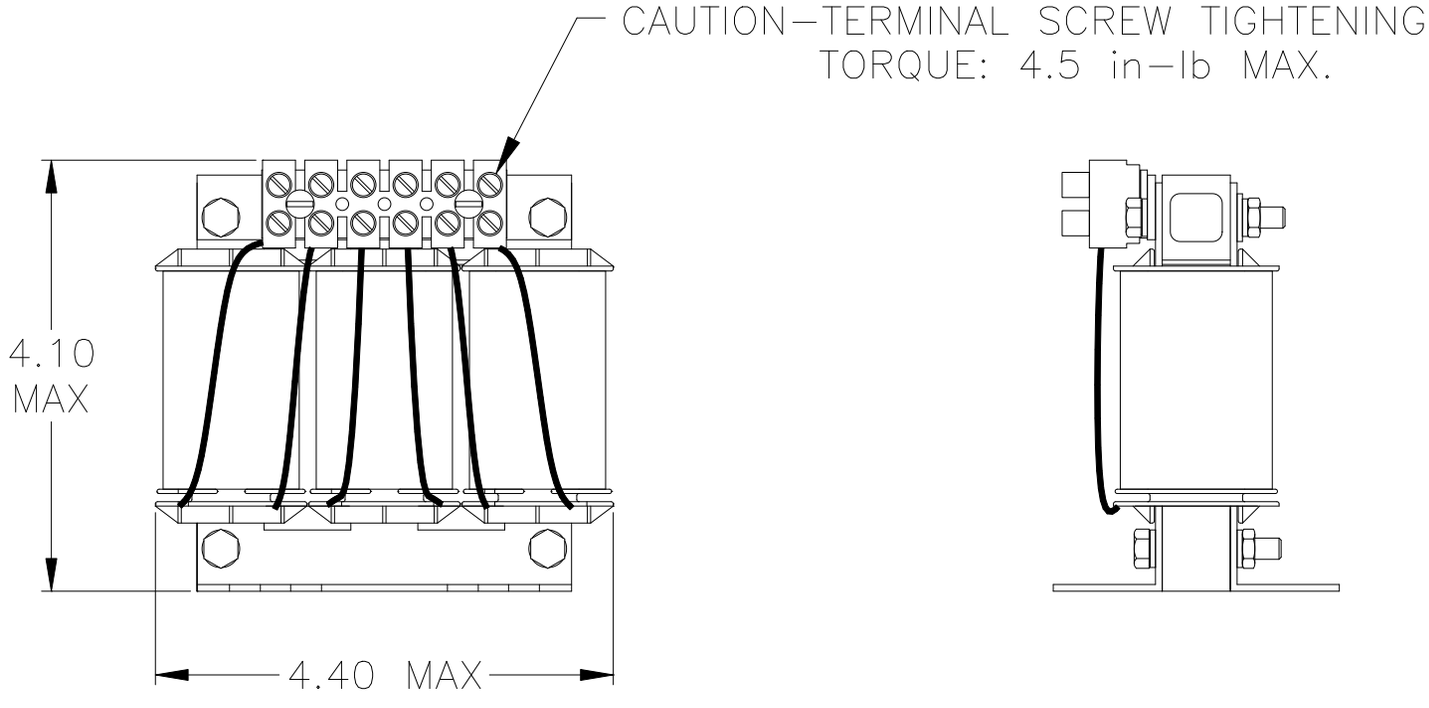

UNLESS OTHERWISE SPECIFIED, DIMENSIONS ARE IN INCHES [mm] AND TOLERANCES ARE:

DECI. FRAC.

ANGLES DRILLED HOLES

PART NAME: 3–PHASE REACTOR

DESCRIPTION: OUTLINE DIMENSION

FINISH:

MTE CORPORATION
MENOMONEE FALLS, WISCONSIN

RL–00202 REV. 13

SCALE NTS	DATE 02/25/94	C'K'D
REF.	DR. BY RD	APP'D